Complete Networking Solutions

GPON
Wireless
Switches
Routers
SFP
EDFA

Solutions for

Broadband

access networks

OPTOKON FTTH-PON SOLUTION

High quality equipment for installation of xPON passive optical networks

CZECH MADE products, produced under ELTEX license in the Czech Republic

WWW.OPTOKON.COM

Third Edition
16-10-03

ABOUT OPTOKON, a.s.

OPTOKON is a leading global designer and manufacturer of fiber optic and telecommunication solutions with a large product portfolio that includes a full range of passive and active equipment for broadband networks.
The innovative range of products are designed for FTTH (fiber-to-the-home) projects:

- GPON system
- Ethernet switches
- VoIP solution
- Wi-Fi networks
- IPTV Set Top Boxes
- Thin clients
- TDM systems
- Control and management SW
- Test equipment

The complete manufacturing cycle includes

1 Development
2 Production
3 Customer support

All equipment produced by OPTOKON in our European manufacturing facility is under exclusive license by ELTEX Enterprise Ltd. OPTOKON provides complex solutions consisting of equipment, management systems, technical support and integration into customer networks.

The OPTOKONcept system has been developed in order to provide clients with a complete solution. The system covers all the requirements of your FTTH project - consultation, project cooperation, pricing, delivery, installation, testing, maintenance and training. In addition the listed active devices, OPTOKONcept includes passive components such as cables, patchcords, ODFs, splitters etc.

A wide network of representatives around the world enables us to provide operative supply and support in over 50 countries.

BROADBAND EQUIPMENT

GPON
- OLT
- ONT

Switches
- Access
- Aggregation
- 10/40G Aggregation

Routers
- ESR

Wireless
- Enterprise Wi-Fi
- FBWA Solutions
- Home CPE

Management
- ACS Configuration
- EMS Management

APPLICATIONS

- Service Provider
- Government
- Security
- Oil Industry, Energy
- Business Solutions, Enterprise
- Data Center

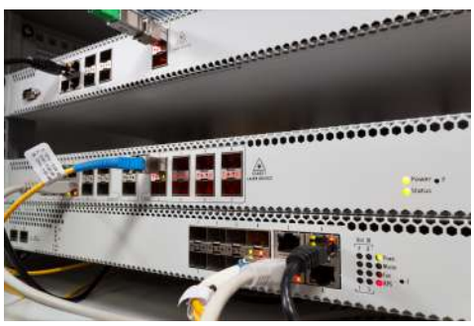

SOLUTIONS

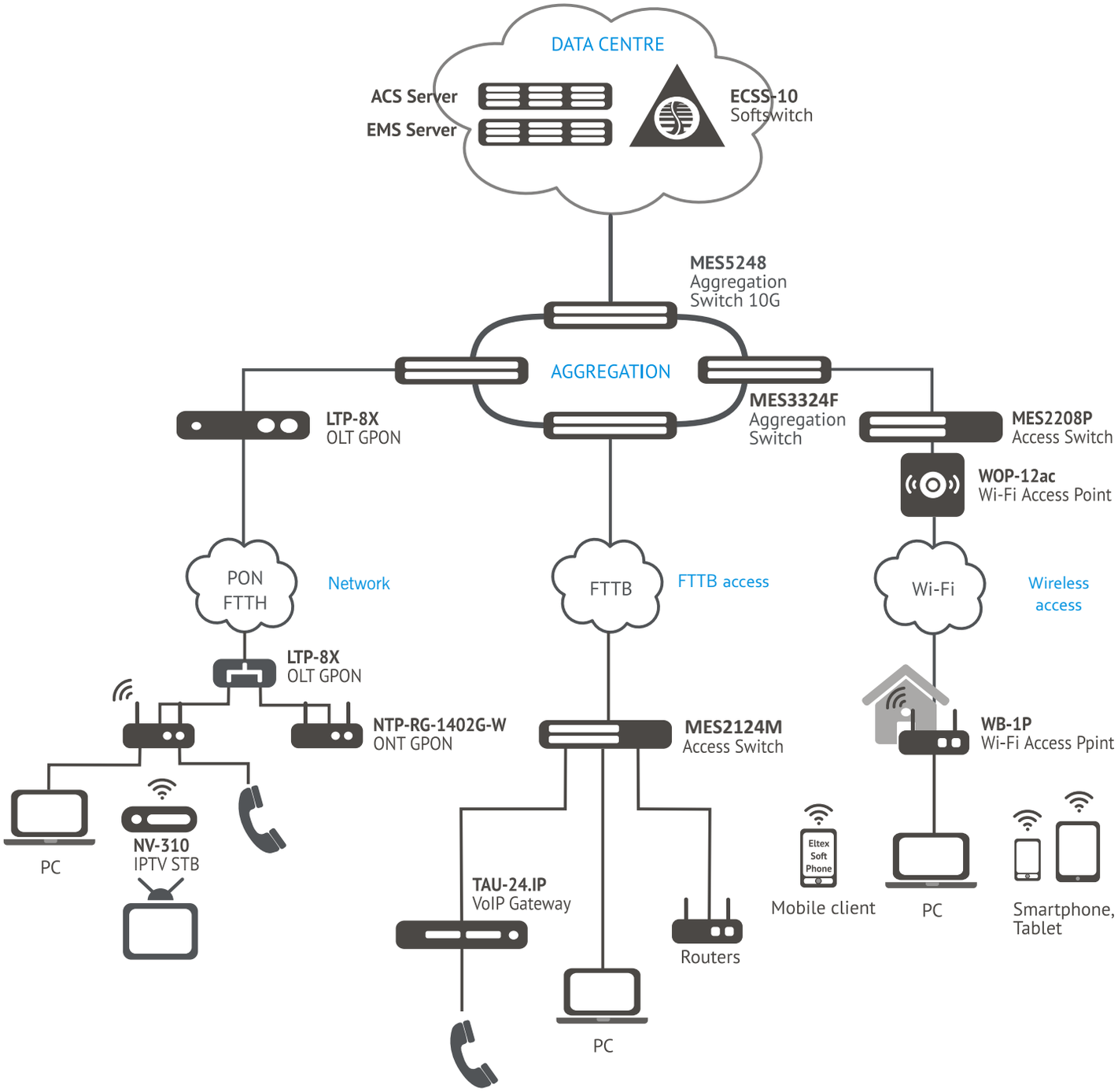

FTTB GPON GIGABIT ACCESS

GUARANTEED SERVICEPROVISION TR-069

INTERACTIVE SERVICES IP-phones Managed network

UNIVERSAL DATA TRANSFER ENVIRONMENT INTERNET

FTTH QOS IPTV/VoD

ADVANTAGES OF PON TECHNOLOGY

- Universal network infrastructure for delivering modern services
- Passive nodes between central office and user nodes
- High reliability (connecting, disconnecting or malfunction of one or more user nodes does not affect the remainder)
- Perfect network scalability
- No 100 meter limit between user and switch
- Wide range of user devices
- Convenient tools for the service provider to manage the entire network – the EMS unified monitoring and control system and the ACS control system enables to manage customer devices via the TR-069 protocol
- Universal solution for different types of networks

PON Technology is the popular technology used for building «last-mile» fixed networks in the world today.

INTERNET
VoIP
IPTV/VoD
INTERACTIVE TV
Quality Monitoring

2 500 000 PON ports worldwide

- Belarus
- Czech Republic
- India
- Kazakhstan
- Latvia
- Pakistan
- Poland
- Portugal
- Romania
- Russia
- Saudi Arabia
- Serbia
- Slovakia
- Slovenia
- Spain
- Tunisia
- Ukraine

GPON OPTICAL LINE TERMINAL (OLT)

OLT enables the operator to construct scalable, failsafe "last mile" networks, ensuring high safety requirements in either urban or rural areas. OLT controls customer stations, traffic switching and access to the transport network.

Broadband customer access using FTTH technology is the Triple Play service provision option of the highest quality, since it makes a high data transfer rate possible over a long distance. The main benefit of PON technology is that there is no need for active nodes between OLT and ONT, which helps to reduce network maintenance costs. Also, PON technology enables to make savings on the cable infrastructure with fewer optic fiber lines required - there is only one optic fiber line used between the central node and the splitter, which connects up to 64 or 128 subscribers.

	LTP-4X	LTP-8X	MA-4000PX
			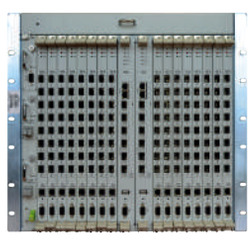
Rack size	19" 1 RU	19" 1 RU	19" 10 RU chassis
Modules			• up to 16 PLC8 modules • up to 2 PP4X modules
Chassis capacity	340 Gbps	680 Gbps	1440 Gbps
PON ports	4	8	up to 256
Uplink ports	• 2 x 10GBase-X (SFP+)/ 1000Base-X (SFP) ports • 4 x 10/100/1000 Base-T/ 1000 Base-X (SFP) ports	• 2 x 10GBase-X (SFP+)/ 1000Base-X (SFP) ports • 4 x 10/100/1000 Base-T/ 1000 Base-X (SFP) ports • 4x 10/100/1000Base-T ports	• up to 8 x 10GBase-X (SFP+) ports • up to 4x 10/100/1000 Base-T/ 1000 Base-X (SFP) ports
ONT support	512	1024	up to 16 384

Provider's access networks for buildings

Enterprise and government access network

CCTV networks

GPON OPTICAL NETWORK TERMINAL (ONT)

ONT is a high-performance multi-functional customer terminal, designed to provide access to modern telephone services and broadband Internet connection.

Universal devices

A 4-port Gigabit 10/100/1000Base-T router enables high-speed communications between network devices. Two FXS ports can connect analog phones to use with a voice over IP service. Devices with an onboard triplexer have an RF-port for TV connection and TV programs (if supported by a service provider). One USB port can be connected to a USB storage device to provide convenient storage and file sharing services within a home network.

Services

- High-speed Internet
- Full HD IPTV, VoD, OTT
- CaTV
- VoIP
- Interactive services

Integration options

- Broadband network access to apartment buildings and complexes, campus structures and villages
- Corporate networks for large-scale strategic enterprises or business centers with advanced security and bandwidth requirements

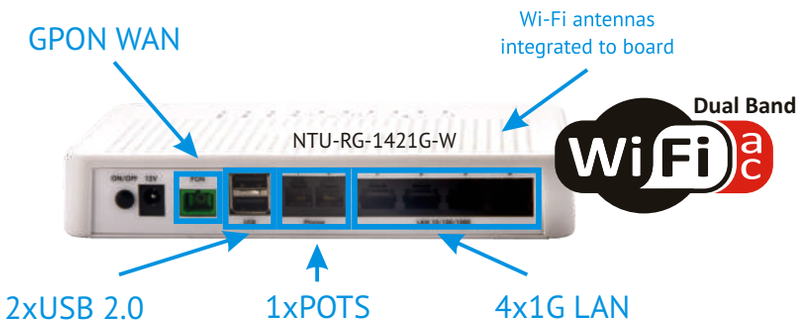

NTU-2W NTU-RG-1402G-W NTP-RG-1402GC-W NTU-2V NSP-100

	WAN	LAN	FXS	RF	Wi-Fi	USB
NTU-2W	1xGPON	1x100M + 1x1G			IEEE 802.11b/g/n	
NTP-RG-1402GC-W	1xGPON	4x1G	2	1xRF	IEEE 802.11b/g/n	1xUSB2.0
NTU-2V	1xGPON	1x100M + 1x1G	1			
NTU-RG-1402G-W	1xGPON	4x1G	2		IEEE 802.11b/g/n	2xUSB2.0
NTU-RG-1421G-Wac	1xGPON	4x1G	1		IEEE 802.11n/ac Dual Band	2xUSB2.0
NSP-100	1xGPON	eth				
NTU-RG-1431G-Wac	1xGPON	4x1G	1		IEEE 802.11n/ac Dual Band	2xUSB2.0
NTU-2VC	1xGPON	1x100M + 1x1G	1	1xRF		

SWITCHES

ACCESS

AGGREGATION

AGGREGATION 10G

Access Switch

The MES access switch is a managed L2 switch with 24 10/100/1000Base-T(X) ports and 4 combined 10/100/1000Base-T/1000Base-X ports. The Switch is designed to connect end users to large-scale corporate networks, medium and small business networks, and to the service provider networks using 100M/1G interfaces.

Switch functions include physical stacking, VLAN support, multicast groups and advanced security functions.

Aggregation Switch

Key features of this type of device are the advanced L2 functions, support for static IP routing, dynamic routing, up to 4x10 Gbit/s (SFP+) interfaces, the ability to work in a stack of up to 8 devices, and power source redundancy with a hot swap function.

Support for fast convergence EAPS protocol makes it possible to achieve an optical ring convergence time of 200 ms, which enables uninterrupted service provision.

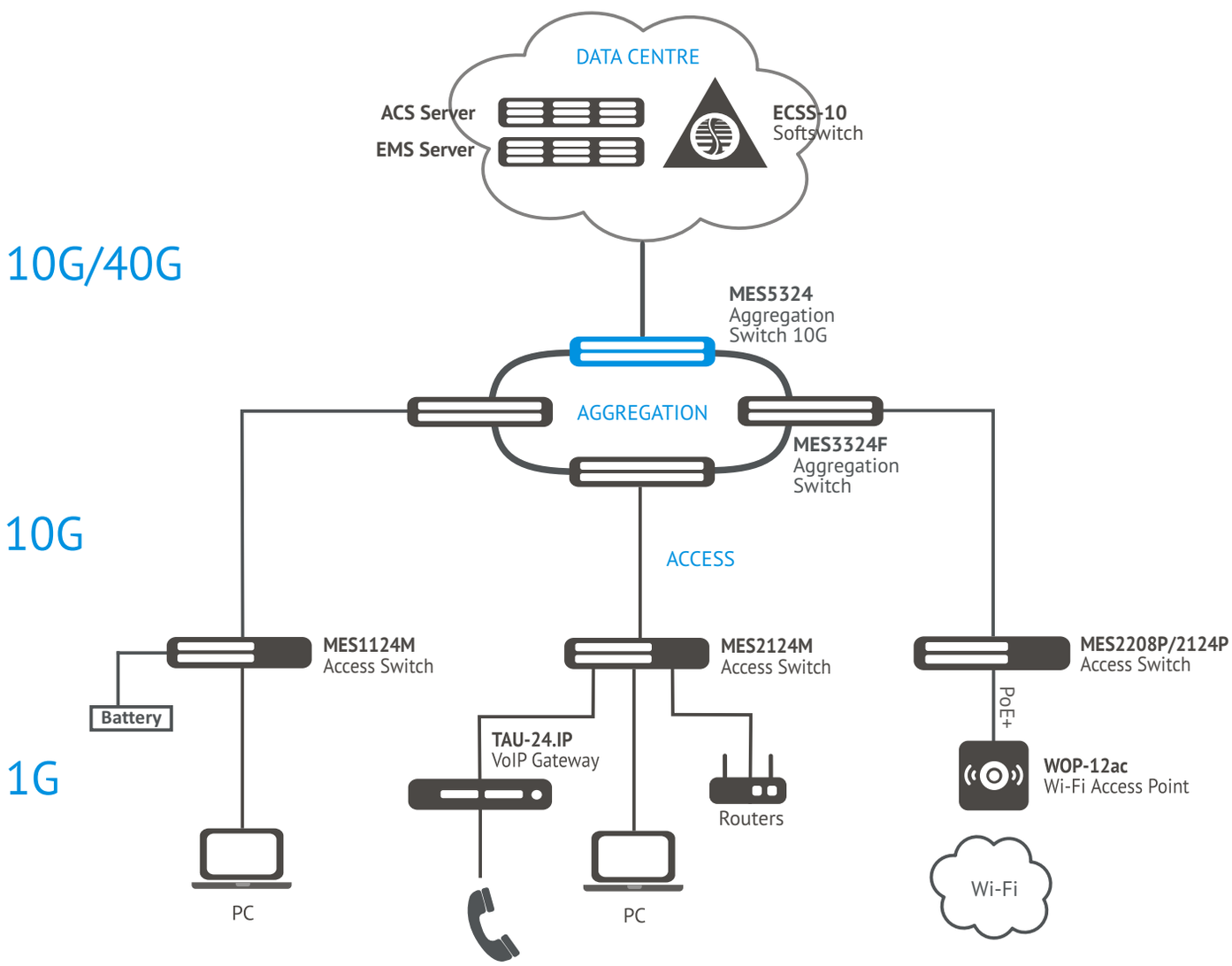

OPTOKON ECOSYSTEM SWITCH

ACCESS

Fast

MES1124M AC/DC

24 x 100M
4 x 1G/SFP
220 V AC/48 V DC

MES1124MB AC

24 x 100M
4 x1G/SFP
220 V AC/12 V DC (battery)

GE

MES2124M AC/DC

24 x 1G
4 x 1G/SFP
220 V AC/48 V DC

MES2124MB AC

24 x 1G
4 x1G/SFP
220 V AC/12 V DC (battery)

PoE

MES3508P

8 x 1G PoE/PoE+
2 x 10G SFP
L2, Industrial

MES2124P

24 x 1G PoE/PoE+
4 x 1G/SFP
220 V AC

10G

MES2324/MES2348B

24G/24G (SFP)/48G
4 x 10G/SFP
220 V AC/12 V DC (battery)

Fiber

MES2124F/MES2324FB

24G/24G (SFP)/48G
220 V AC/12 V DC (battery)

Available / **Under development**

AGGREGATION

MES3324F

up to 24 x 1G/SFP
up to 4 x 10G/SFP
L3

MES3424F/3448F

up to 48 x 1G/SFP
up to 4 x 10G/SFP
L3

Available / **Under development**

AGGREGATION 10G

10G/40G

MES5312/MES5324

24 x 10G SFP+
4 x 40G QSFP
L3
64K MAC

MES5448

48 x 10G SFP+
4 x 40G QSFP
L3
128K MAC

2016 → 2017

SERVICE ROUTERS

ESR is a high-performance network security solution for enterprises and service providers that pack high port-density, advanced security, and flexible connectivity into one easily managed platform.

Key benefits of the ESR-1000 is a hardware acceleration of data rate which enables a high-perfomance solution. Hardware and software processing is distributed among the nodes of the device.

ESR-1000

- **IPSec VPN**
- **Next generation firewall protection and NAT**
- **L2TP, PPTP**
- **L3 routing**
- **Conversion from IPv4 to IPv6 (6to4, 4to6)**
- **Network data filtering**
- **Detection and prevention of network intrusion attempts, data loss protection**
- **Analysis of network traffic and network activity in relation to applications and users**
- **Backup connections to network providers**

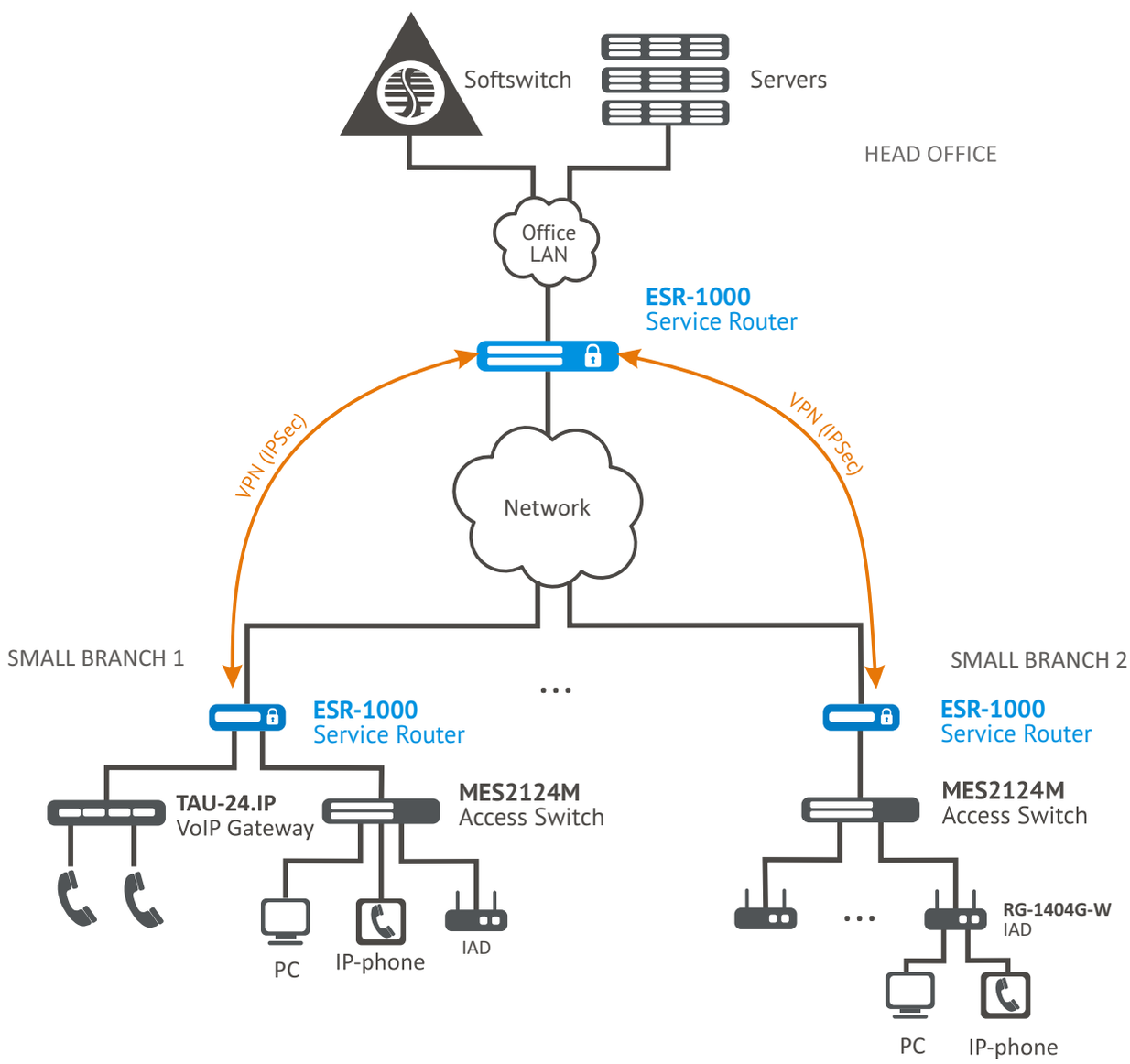

SERVICE ROUTERS

	ESR-100	ESR-200	ESR-1000	ESR-1200
Performance of Firewall (big packets), Gbps	0,91	1,6	7,2	
Performance of NAT (big packets), Gbps	0,98	1,6	6,1	
Performance of IPsec VPN (big packets), Gbps	0,58	0,82	3,7	
VPN tunnels	200	200	500	
Static routes	11K	11K	11K	
Concurrent sessions amount	256K	256K	512к	
Performance of L2 switching (big packets), Gbps	3,03	3,94	86,9	
Performance of L3 routing (big packets), Gbps	1	1,6	8,2	
BGP routes	1M			
OSPF routes	450K			
RIP routes	9K			
Size of FIB	11K			

Hardware Benefits

	ESR-10/12/12V	ESR-100	ESR-200	ESR-1000	ESR-1200
	In development				
Interfaces					
Ethernet 10/100/1000 Base-T	4/8/8		4	24	12
Combo 10/100/1000BASE-T / 1000BASE-X SFP		4	4		4
10GBASE-R SFP+/ 1000BASE-X	2/0/0			2	8
USB2.0	2/1/1	1	1	2	2
FXS	0/0/3FXS-1FXO	1	1	2	
Slot for SD cards		●	●	●	●
Technical characteristics					
RAM	0,5 Gb	up to 8 Gb	up to 8 Gb	up to 8 Gb	up to 8 Gb
Built-in Flash-memory	0,5 Gb	1 Gb	1 Gb	1 Gb	1 Gb
Power supplies	220V AC	220V AC	220V AC	220V AC / 48V DC	220V AC / 48V DC
Reservation of power supply hot change				●	●
Replaceable ventilation modules				●	●
Hardware					
Hardwared acceleration of encryption		●	●	●	●
Hardwared DPI accelration		●	●	●	●
Hardwared support of L2 and L3 functions				●	●

UNIVERSAL series routers ME

ME5000 is the high performance router series with high ports' density and can be used for in datacenters and in operator's core network as the border router (PE) and transport router (AR, DR).

Me5000 support dynamic scaling of the network for simultaneous increase of network capacity and support new users and services. Platform can provide high system throughput and has non-blocking switch matrix that provides and ensures switching speed in all interfaces - it will be great solution for large corporate centers.

	ME5100	ME5000
		
Form factor	19'', units	19'', Euro card 14U modular construction
Filling rack		☙ up to 2 FMC16 modules ☙ up to 12 linear modules ☙ FMC16, 1,6Tbps ☙ LC20XGE-F – 20x 10Gbps (SFP+), 200Gbps 300Mpps ☙ LC4XLGE-F – 4x 40Gbps (QSFP), 160Gbps 300Mpps ☙ LC1CGE-F – 1x CGE (CFP), 100Gbps 300Mpps
Performance	300Mpps 180Gbps	300Mpps/Line card 200Gbps/Line card
Functional characteristics	☙ XLP308, 1500MHz ☙ 8GB RAM ☙ 180 Gbps, 300Mpps ☙ 250K MAC ☙ 36K Bridge domains ☙ 32K LPM (IPv4) ☙ 8K L3 sub-interfaces ☙ 96K QoS queues	☙ MAC address table 250K/line card ☙ HQoS, queues 96K/line card, 2K/port ☙ L3 subinterfaces up to 20K ☙ MPLS L3VPN/PW up to 12K ☙ Routing and management module redundancy ☙ Power supply modules backup ☙ Ventilation module redundancy ☙ Software backup
Interface	☙ 24 x 1000BASE-X (SFP) ☙ 16x 10GBASE-R (SFP+)	☙ LC20XGE-F – 20x 10Gbps (SFP+), 200Gbps 300Mpps ☙ LC4XLGE-F – 4x 40Gbps (QSFP), 160Gbps 300Mpps ☙ LC1CGE-F – 1x CGE (CFP), 100Gbps 300Mpps

BROADBAND WI-FI ACCESS

Solution for businesses

OPTOKON AP provides a high-speed, secure, accessible and easy to use wireless network, which combines a variety of features and services needed for corporate clients. AP will become a universal solution for the organization of the wireless network with a large number of users and high traffic (office, government offices, conference rooms, laboratories, parks, hotels, etc.)

up to 1.3 Gbps | up to 400 users | Cluster up to 64 AP | PoE/PoE+ Low energy

WEP-12AC

Wi-Fi Enterprise
Indoor Access Point

Applications
- Offices
- Hotels
- Education
- Medical
- Government

WOP-12AC / WOP-12AC-LR

Wi-Fi Enterprise
Outdoor Access Point

Applications
- Roads
- Parks
- Villages
- CCTV
- Manufacturing
- Parking

WB-1P/WB-1P-LR

Wi-Fi Users
Outdoor Access Point

WB-2

Wi-Fi Users
Indoor Access Point

- **High-perfomance chipset**
- **Broadcom chipset**
- **Wi-Fi IEEE 802.11ac (5G)**
- **PoE+, Power Adapter**
- **Zero-Handoff Roaming**
- **Modern tools for authentication and encryption (WPA, WPA2 ...)**
- **High performance AP**
- **Dual Band Wi-Fi: 2.4 and 5 GHz (Integreted antennas)**
- **Centralized autorization via RADIUS server (WPA Enterprise)**
- **Controller Clustering**

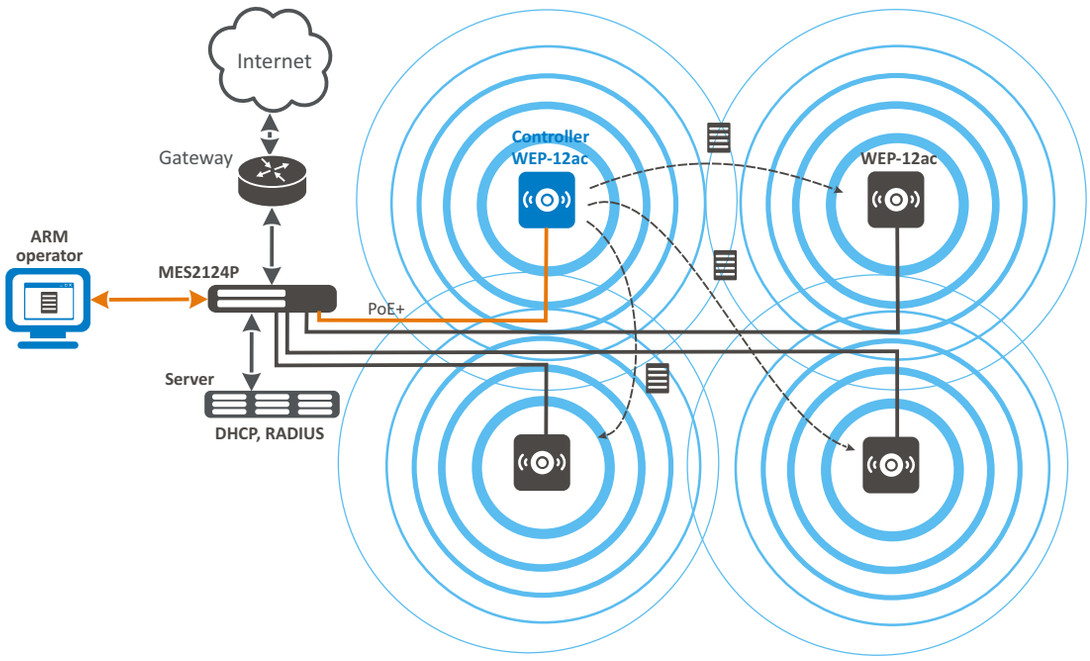

MANAGEMENT

Cluster

up to 64 Access Points

The WEP-12ac controller

- To manage the configuration of devices in the cluster group
- A guest zone
- Authorization within the local area
- A WLAN Group

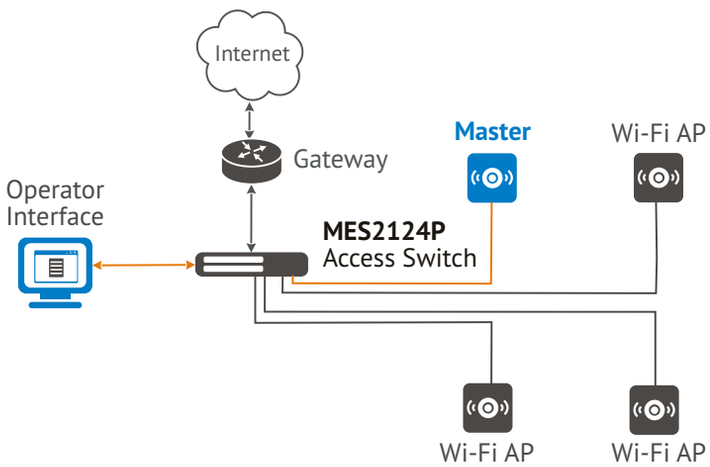

Controller

up to 100 000 Access Points

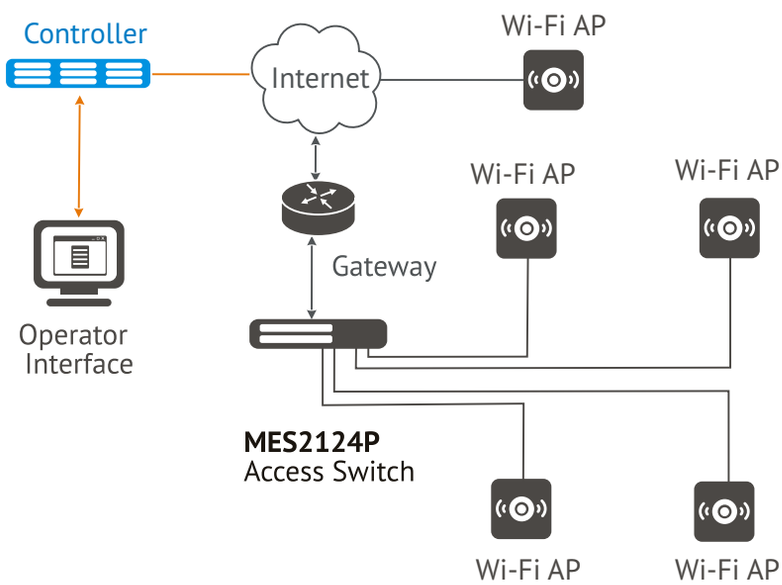

FBWA

(Fixed Broadband Wireless Access)

FBWA (Fixed Broadband Wireless Access) is used to create an end-to-end network with a central base station connected to many subscribers.

This solution is an alternative version of the networking broadband in villages and areas where there is no possibility to build a wired 1.5-2 km network area.

Related OPTOKON equipment:

- Wi-Fi Outdoor Access Point WOP-12AC/WOP-12AC-LR
- Antennas (up to 6 sector antennas)
- Access Switch MES2108P/2124P with PoE+ support
- Wi-Fi Access Point for Home - WB-1P/WB-1P-LR

WOP-12ac

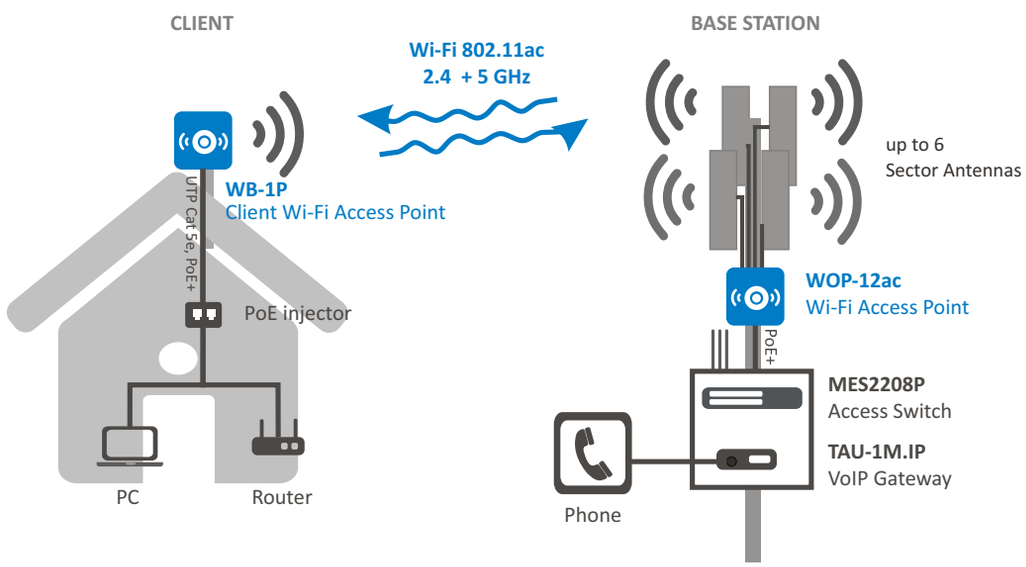

WB-1P

NEXT WAVE GENERATION

1 generation
Wave 1

Wi-Fi AP

1.35 Ggps

- Wi-Fi 802.11ac
- 3x3 MIMO
- 2.4+5 GHz
- 80 MHz
- 256 QAM
- 2 x 1 Gbps Uplink Ethernet

2 generation
Wave 2[1]

Wi-Fi AP

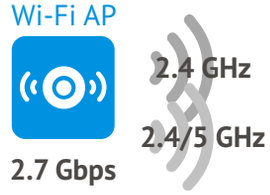

2.7 Gbps

- Wi-Fi 802.11ac
- **4x4 MU-MIMO**
- 2.4+2.4/5 GHz
- **160** MHz (80+80)
- **1024** QAM
- 2 x **2.5** Gbps Uplink Ethernet
- TX and RX 802.11ac **Beamforming, Smart Antenna**

[1] 4Q'2015

ENTERPISE и HOTSPOT SOLUTIONS

Complex solution for building WIFI network from OPTOKON provides possibility to develop access level network by service providers.

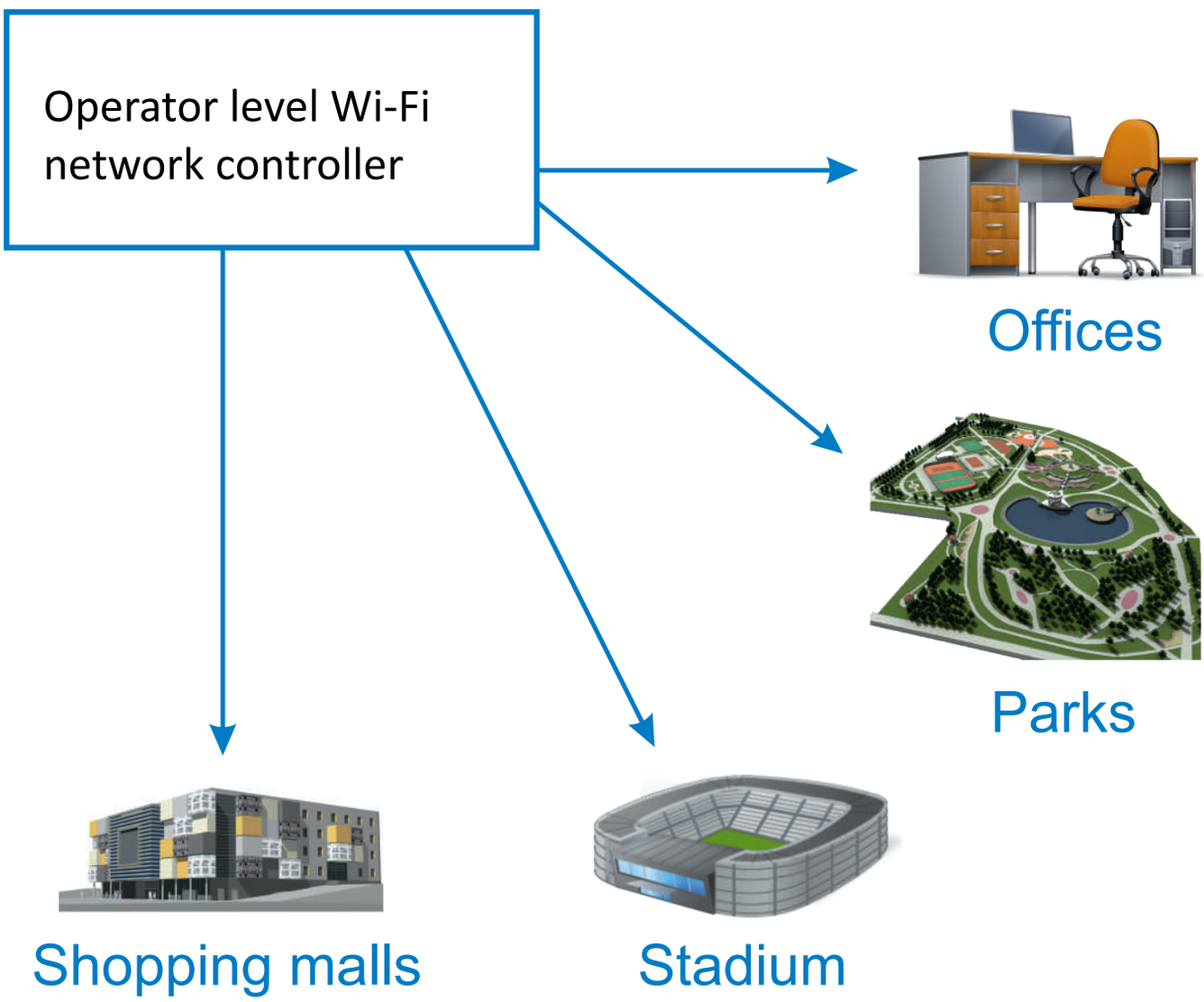

	WEP-12ac	WOP-12ac	WEP-2ac	WOP-2ac
Case	Internal	Internal	Internal	Internal
Chipset	Broadcom BCM 43460	Broadcom BCM 43460	Broadcom BCM 43460	Broadcom BCM 43460
Port types 10/100/1000 Base-T	2	2	2	2
Quantity of independent radio-interfaces	2	2	2	1
Wireless 802.11 a/b/g/n/ac	●	●	●	●
Antenna quantity	6	6	4	4
Support of MIMO technologies	3x3	3x3	2x2	2x2
Operating temperature	from +5°C to +40°C	from -40°C to +60°C	from +5°C to +40°C	from -40°C to +60°C

AUTO CONFIGURATION SERVER (ACS) MANAGEMENT SYSTEM (EMS)

- **State and performance monitoring**
- **Remote editing and work with template settings**
- **Adding or removing connection session**
- **Session management of devices**
- **Updating firmware on devices**
- **Creating tasks that will be completed on schedule**
- **A single management server via network**
- **EMS connection with superior OSS/BSS providers**
- **Control through WEB-interface**

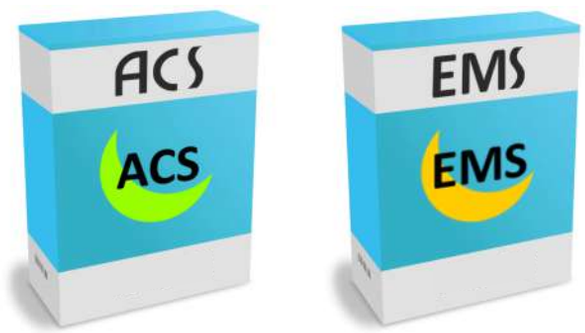

The ACS automatic configuration server is designed for easy and automated configuration of customer devices (CPE) via the protocol, corresponding to the TR-069 standard, and allowing the service provider to manage customer devices from a single location via the global network. This standard defines the technology to carry out secure automated CPE configuration, and includes all CPE management functions on a single system.

OPTOKON EMS is a centralized network device management system made by OPTOKON. EMS is based on client-server architecture. A single access server allows to manage various network elements using a web-interface.

EMS main functions:

- Monitoring device parameters such as uptime, temperature, CPU load, fan speed, firmware version and serial number
- Graphic presentation of physical port status
- Monitoring physical and logical interface statistics
- Monitoring optical interface parameters: module type, optical power and received signal level, and measured distance
- SFP module management
- Gathering information on the large number of active subscribers
- Gathering information on established PPPoE sessions.
- Managing customer profiles
- Managing customer ports: DSLAM, PON configuration, profile roles
- Power supply monitoring
- Internet, VoIP and IPTV services monitoring and customer statistics collection

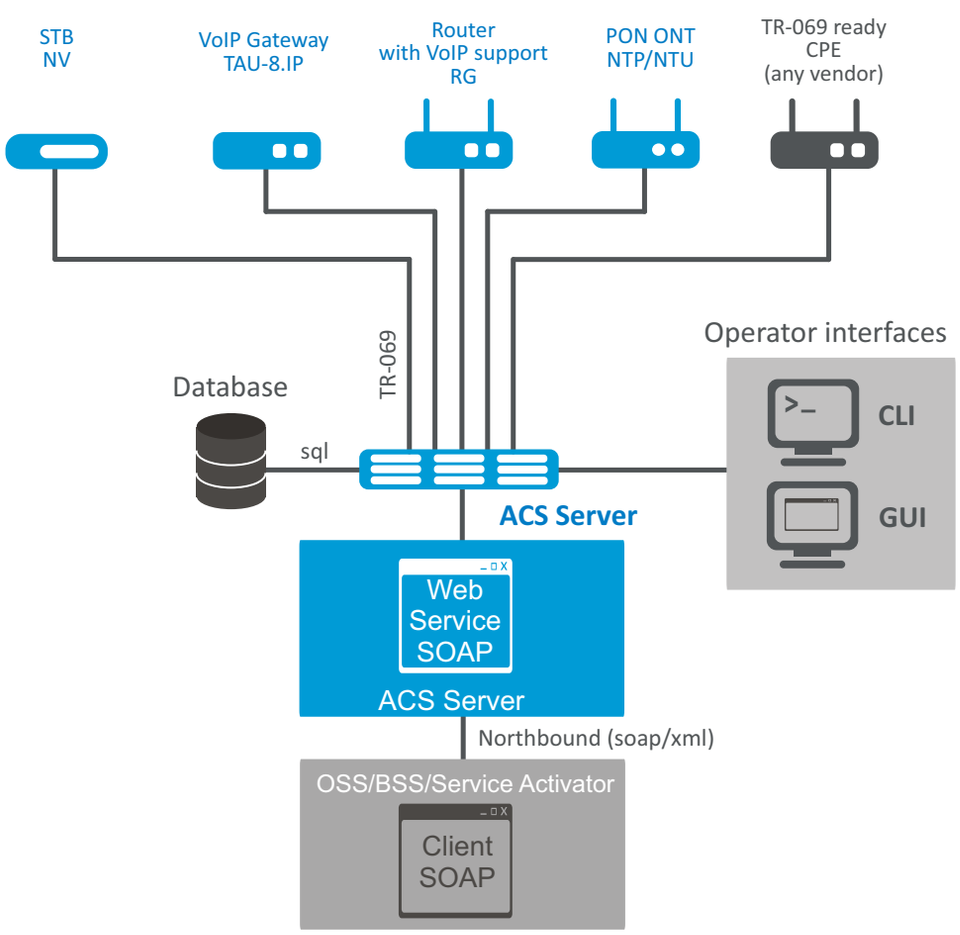

OPTOKON VoIP SOLUTIONS

Visual Communication

Voice Mail
Call Forward
Call Recording
Call Hunt
Fax-to-Email
Call Center
Session Border Controllers
Conference
Group Call
Mobile Client
Voice
IP Centrex
Call Hold
Selective Telephony
IVR
Follow me
Parallelism
Conference
Queue

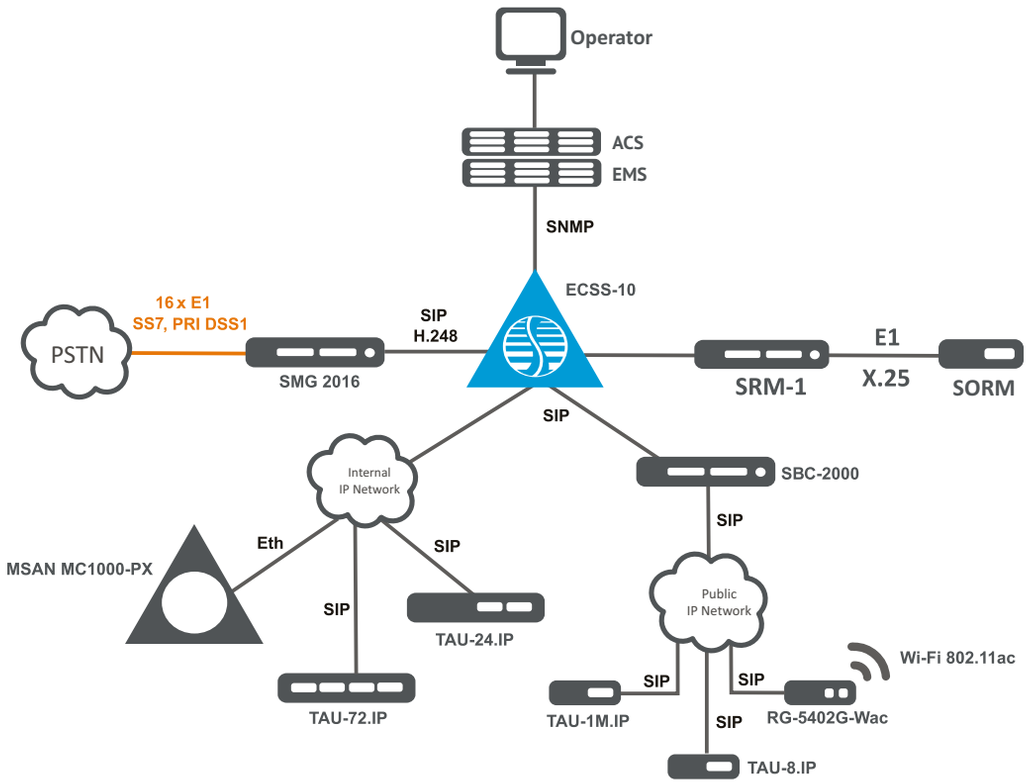

IP-PBX

- Corporate solutions for 500 users
- Operator solutions for 2000 and 3000 users
- Softswitch 4/5 classes
- Session Border Controllers
- SORM Solutions

Contact Center

- Corporate call center
- High-Loaded redundant nodes

Emergency Call System 112

- Redundant Call Center
- Ethernet Switches
- Unified management system

Access Equipment

- Home terminals
- Business terminals
- Access gateways
- Trunking gateways

Home terminals

	WAN	LAN	FXS	USB	Wi-Fi
TAU-1M.IP	1x100M	2x100M	1	1	
RG-4402G-W	1x1G	4x1G	2	1	●
RG-5421G-Wac	1xSFP	4x1G	2	1	●
RG-34-Wac	1x1G	4x100M	1	1	●

Business terminals

	WAN	LAN	FXS	USB	Wi-Fi
TAU-2M.IP	1x100M	1x100M	2	1	
TAU-8.IP	1x1G		8		
RG-1404G	1x1G	4x1G	4	1	
RG-1404G-W	1x1G	4x1G	4	1	●
RG-1404GF-W	1xSFP	4x1G	4	1	●
RG-4402GF-W	1xSFP	4x1G	2	1	●

Access VoIP Gateways

Number of FXS ports

TAU-16.IP	TAU-24.IP	TAU-32M.IP	TAU-36.IP	TAU-72.IP	MC1000-PX
16	24	to 32	36	72	to 1152

Trunking Gateways

SMG-1016M
- Trunking gateway with 16x E1 support (up to 40 cps)
- IP-PBX with 2000 SIP registrations support

SMG-2016
- Trunking gateway with 16x E1 support (up to 90 cps)
- IP-PBX with 3000 SIP registrations support support (up to 90 cps)

SMG-4
- Convertor TDM and VoIP protocols with 4x E1 support

SMG-2
- Up to 2x E1

Home terminals

TAU-1M.IP

RG-5421G-Wac

RG-4402G-W

RG-34-Wac

– high quality voice
– VLAN per service
– autoconfiguration
– 3G/4G reservation
– 5G Wi-Fi 802.11ac

	TAU-1M.IP	RG-4402G-W	RG-5421G-Wac	RG-34-Wac
FXS	1	2	1	
WAN	1x100M	1x1G	1x1G	1x1G
SFP WAN		optional		
LAN	2x100M	4x1G	4x1G	4x100M
USB 2.0	1	1	2	1
Wi-Fi b/g/n		MIMO 2x2	MIMO 2x2	MIMO 1x1
Wi-Fi ac			MIMO 2x2	MIMO 2x2
IPv6			●	●
3G/4G modem	●	●	●	●
Chipset	Realtek RTL8954C	Realtek RTL8954C	Realtek RTL8954ES	Realtek RTL8881AB
Customization	●	●	●	●

Business terminals

RG-1404G-W

- high performance
- 3G/4G reservation
- access to network resources
- optical WAN
- autoconfiguration

TAU-2M.IP

TAU-8.IP

RG-4402GF-W

	TAU-2M.IP	RG-1404G	TAU-8.IP	RG-4402GF-W
FXS	2	4	8	2
WAN	1x100M	1x1G	1x1G	1x100M
SFP WAN		optional		●
LAN	1x100M	4x1G		4x1G
USB 2.0	1	1	1	1
Wi-Fi		optional 802.11 b/g/n MIMO 2x2		802.11 b/g/n MIMO 2x2
3G/4G modem	●	●	●	●
Chipset	Realtek RTL8954C	Mindspeed C1000	Mindspeed C1000	Realtek RTL8954C
Customization	●	●	●	●

Access VoIP Gateways

TAU-16/24.IP

- **IP-PBX functionality**
- **high quality voice**
- **voltage and current protection**
- **measurement of physical parameters**
- **maximum length 4 miles**

TAU-32M.IP

TAU-36.IP

TAU-72.IP

	TAU-16.IP	TAU-24.IP	TAU-32M.IP	TAU-36.IP	TAU-72.IP
FXS ports	16	24	up to 32	36	72
FXO ports			up to 32		
Connector type	TELCO-50	TELCO-50	CENTRONICS-36	CENTRONICS-36	CENTRONICS-36
Ethernet ports 10/100/1000Base-T (RJ-45)	2	2	3	3	3
Ports 1000Base-X (slots for SFP-modules)	1	1	2	2	2
VoIP protocols	SIP, H.323, H.248				
Faxing	T.38, G.711 pass through				
Type of WAN connection	Static, DCHP, PPPoE				

Trunking Gateways

	SMG-2016	SMG-1016M	SMG-4	SMG-2
Appearance				
Dimensions	420x340x45 mm 19" 1U	420x240x45 mm 19" 1U	187x120x32 mm table top mounting	187x120x32 mm table top mounting
Chipset	Quad-Core ARMv7	Dual-Core ARMv5	Dual-Core ARMv7	Dual-Core ARMv7
Interfaces	– 2 ports 1G (RJ-45) – connectors type RJ-48 – 2 slots SATA HDD 2.5" – 2 ports 1G (RJ-45)	– 3 ports 1G (RJ-45) – connector type CETRONICS-36 – 2 slots SATA SDD – 2 ports 1G SFP	– 2 ports 1G (RJ-45) – connector type RJ-48	– 2 ports 1G (RJ-45) – connector type RJ-48
Maximum load intensity	90 cps	up to 40 cps	40 cps	40 cps
SIP user registration	up to 3000	up to 2000		
Value Added Services support	up to 3000	up to 1000		
Capacity	– up to 768 channels – up to 16 E1 flows		– up to 128 VoIP channels – up to 4 E1 flows	– up to 64 VoIP channels – up to 2 E1 flows
Functional capabilities	– Work with billing via RADIUS – DTMF – CDR file formation – TDM protocols: (SS7, PRI (Q.931), Q.699) – VoIP protocols: SIP, SIP-T/SIP-I – SNMP – STUN server			
Options	– Expanded Value Added Services – SORM – H.323 activation – VLAN number increasing – RADIUS Call Management – CallRecording			
Cooling	Exchangeable fans	Built-in fans	Passive cooling	

IP-PBX Platform

	ECSS-10		
	SOFTSWITCH	SMG-2016	SMG-1016M
Maximum user amount	Depends on server resources	3000	2000
Simultaneous connections amount		768	768
Maximum load intensity		90 cps	14 cps
Scalability	●		
Reservation	active-active		
Services			
Standard set	●	●	●
IVR	●	●	●
Voice Mail	●		
Call Record	●	●	●
Fax-to-Email	●		
IP Centrex	●		
Selector communication	●		
Follow Me	●		
Call Hunt	●	●	●
Call Pickup	●	●	●
Music on hold	●	●	●
Call Transfer	●	●	●
Queue	●		
External attack protection	●	●	●

Solutions for operators

IP-PBX with LI

1. Minimum expenses at launch

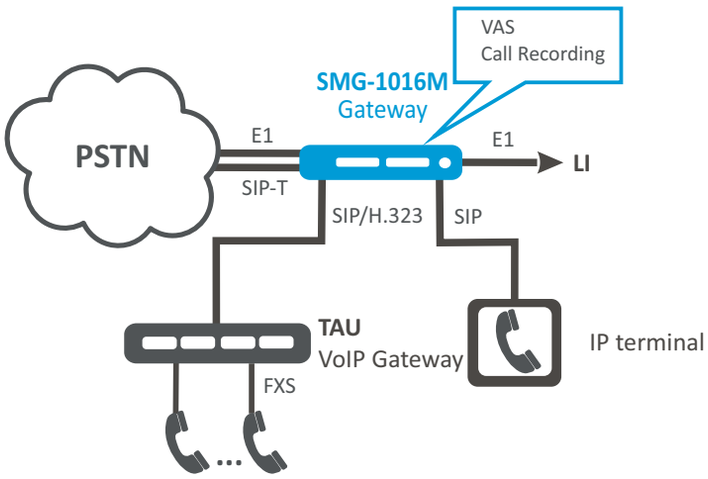

2. Migration to scalable solution with IP Centrex

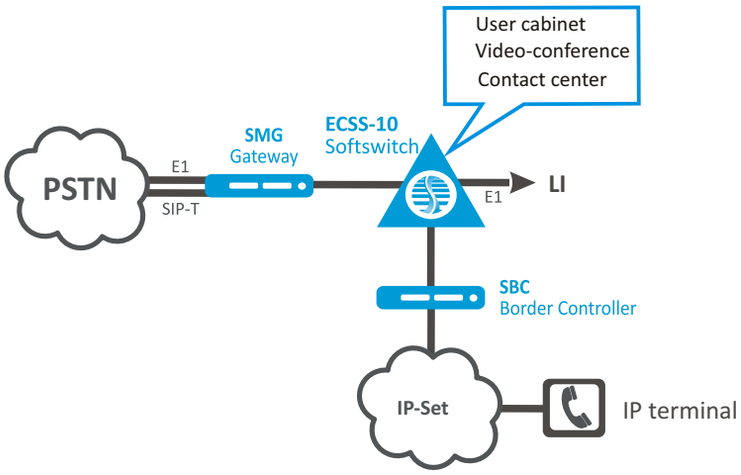

Key benefits

– minimum expenses for IP-PBX launch

– save on investment during migration from one step to another

– complete safe solution from one vendor

– unified management system of one vendor

– interoperability

– adaptation to customer requirements

– quick technical support

– migration to server solution

- **linear scalability**
- **active-active reservation**
- **geographic reservation**
- **hot software reservation**

Corporate solutions

Distributable corporate VoIP network

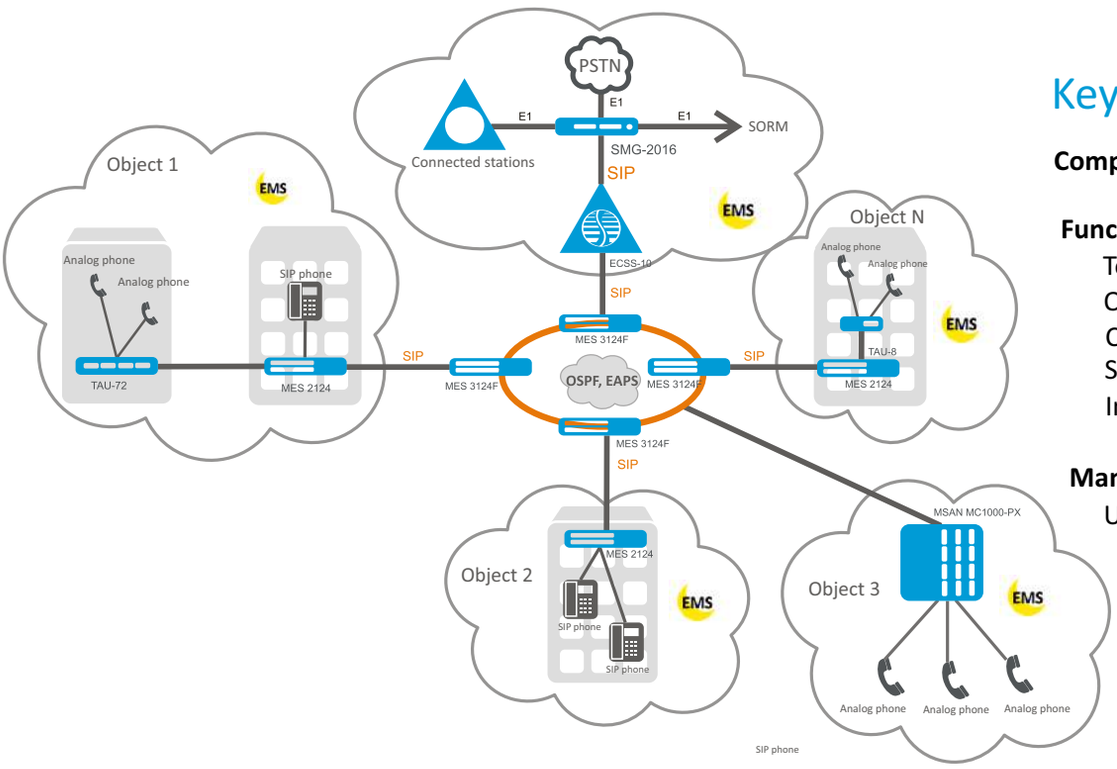

Key features

Complete solutions from one vendor

Functionality
- Telephony
- Queue
- Conference call
- Selective telephony
- Intercom system

Management
- Unified management system

Selective telephony

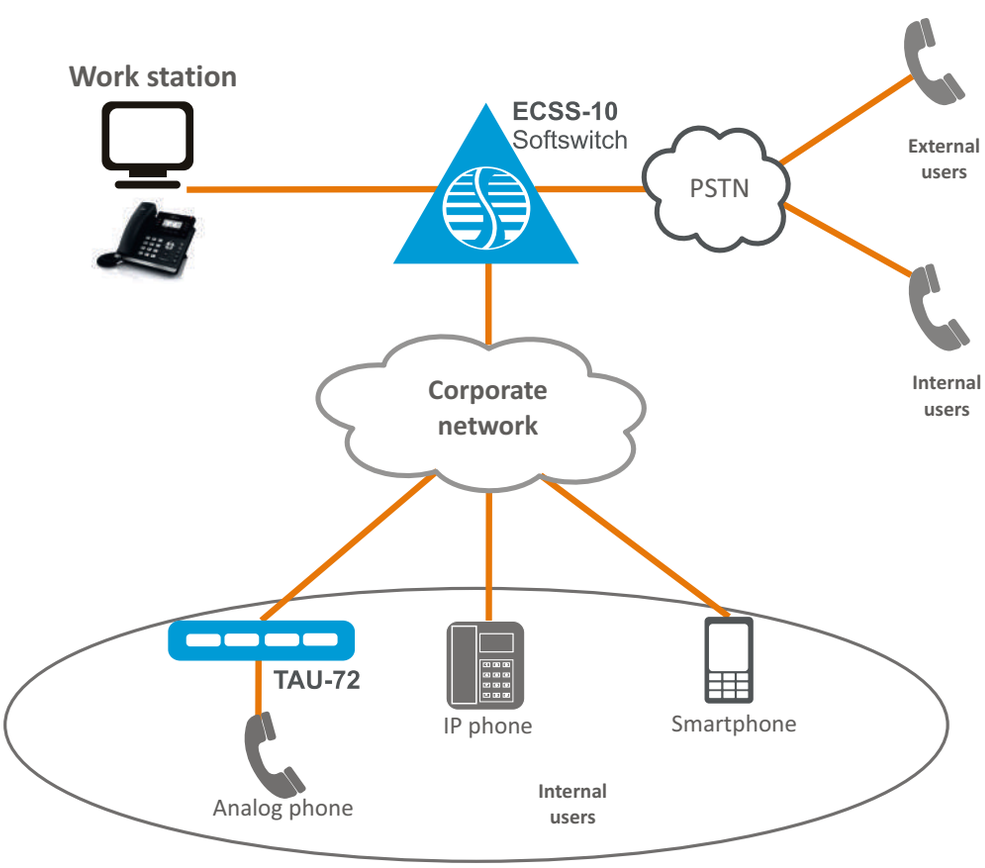

Key features

Unified platform for telephony and selective telephony

Operator work station
- Modern console
- Web interface

Member terminals
- Analog and IP phones used as internal connections

Members
- Up to 120 participants
- Internal users
- External users

Template meetings

Conference record

History

Sheduling

SFP Transceivers

GPON SFP Transceivers

SFP GPON OLT Transceiver CLASS B+ 2488/1244Mb/s With Digital RSSI Function, low cost point-to-multipoint (P2MP) Fiber to the Home, Business or Curb (FTTX) GPON OLT transceiver. It is designed for 2488Mb/s downstream / 1244Mb/s upstream duplex data links that employ high-speed burst mode TDM receivers/transmitters.

SFP Transceivers 155 Mbps

The S155 series are hot pluggable 3.3 V Small-Form-Factor (SFP) duplex, bidirectional and CWDM transceiver modules designed expressly for high speed communication applications that require rates of up to 155 Mbps. Transceivers are compliant with the Fast Ethernet, ATM, SONET OC 3/SDH STM 1 standards. All SFP transceivers have the digital diagnostic monitor feature.

SFP Transceivers 622 Mbps

The 622 Mbps series are hot pluggable Small-Form-Factor (SFP) duplex, bidirectional and CWDM transceiver modules expressly designed for high speed communication applications that require rates of up to 622 Mbps. Transceivers are compliant with the Fast Ethernet, ATM, SONET OC 12/SDH STM 4 standards. All SFP transceivers have the digital diagnostic monitor feature.

SFP Transceivers 1.25 Gbps

The 1.25Gbps series are hot pluggable Small-Form-Factor (SFP) duplex, bidirectional and CWDM transceiver modules expressly designed for high speed communication applications that require rates of up to 1.25 Gbps. All SFP transceivers have the digital diagnostic monitor feature.

SFP Transceivers 2.50 Gbps

The 2.50 Gbps series are hot pluggable Small-Form-Factor (SFP) duplex, bidirectional and CWDM and DWDM transceiver modules expressly designed for high speed communication applications that require rates of up to 2.50 Gbps. All SFP transceivers have the digital diagnostic monitor feature.

SFP Transceivers 4.25 Gbps

The 4.50 Gbps series are hot pluggable Small-Form-Factor (SFP) duplex, bidirectional and CWDM transceiver modules expressly designed for high speed communication applications that require rates of up to 4.50 Gbps. All SFP transceivers have the digital diagnostic monitor feature.

SFP+ Transceivers 10 Gbps

OPTOKON transceivers are compliant with IEEE 802.3ae and the 10G MSA (Multi-Source Agreement). The S10-D55, 1550 nm cooled EML laser based 10 Gigabit SFP+ transceiver is designed to transmit and receive optical data over single mode optical fiber for link length of up to 80 km.

QSFP28 SR4 Transceivers 100 Gbps

OPTOKON QSFP transceivers are compliant with IEEE 802.3ba and the 100G MSA (Multi-Source Agreement). Up to 27.952 Gbps Data rate per channel. Maximum link length 100 m on OM3 or 150 m on OM4 multimode fiber.

CFPA LR4 Transceivers 100 Gbps

OPTOKON CFP2 transceivers are compliant with IEEE 802.3ba and the 100G MSA (Multi-Source Agreement). Support line rates from 103.125 Gbps to 111.81 Gbps. Integrated LAN DWM TOSA / ROSA for up to 10 km.

CLAQ – CzechLight Amplifier devices

The CLAQ is family of low noise, high performance and improved reliability EDFA (Erbium Doped Fiber Amplifier), designed to support turnkey amplification solutions for fiber networks. The CLAQ EDFA family includes Pre-Amplifier, Booster EDFA. The 1U frame can accept four EDFA modules, two pairs of Pre-Amplifier and Booster amplifier for example. The electronic control board permits to control separately the 4 EDFA modules.

- **Up to 4 EDFA modules in 1U frame**
- **Pre-amp / Booster / In-line**
- **C and L bands**
- **Multi channel amplification (e.g. long-haul DWDM)**
- **Low noise figure**
- **Microcomputer control system**
- **RS232, Ethernet, USB interfaces**
- **Redundant power supply**

CLA-CA CzechLight CATV Amplier

The CLA is a family of low noise, high performance and improved reliability EDFA (Erbium Doped Fiber Amplifier), designed to support turnkey amplification solutions for fiber networks. The CLA-CA EDFA includes a high performance Booster EDFA module. The passive optical splitter ensures a high number of output ports with defined power level of optical signal for connection of CATV distribution network. The electronic control board enables remotely control all operation functions.

- **Booster CATV module, optical splitter included**
- **8/16/32/64 output ports**
- **Low noise figure**
- **Monitoring port (1% of power)**
- **Microcomputer control system**
- **RS232, Ethernet, USB interfaces**
- **Command line with predefined commands**
- **Dual power supply**

CLA-CAC CATV combiner

The CLA-CAC, CATV combiner is based on the family of low noise, high performances EDFA, erbium doped fiber amplifiers. The combiner is designed to support cost effective and turn key amplification solutions for fiber optic network. The CLA-CAC includes the EDFA high power module and FWDM filters to combine digital data 1310/1490 nm and analog CATV 1550 nm signals. The summary, data and CATV signal is split to higher number 8 and 16 output ports. This allows the delivering of data and TV services to the end user over one fiber in PON installations.

CL-VMUX - variable optical multiplexer

The CL- VMUXv2 provides a wavelength multiplexer with integrated VOA (VMUX) based on a solid-state solution for multi-channel. The multiplexer includes a control board, which is designed for remote access and parameters setings. The CL-VMUXv2 allows automatic channel balancing, it can be done before wavelengths are multiplexed. This allows the multiplexing of optical signals at different power levels such as those from different transmitters, line rates and protocols. This product is bidirectional and can be used as either VMUX or VDEMUX.

- **Accurate VOA control enables managed network nodes**
- **40 channel for 100 GHz channel grid**
- **80/96 channels for 50 GHz channel grid**
- **Output signals monitoring**
- **Low insertion loss, high isolation increase system margin**
- **High dynamic range, low PDL VOA performance**
- **Available in MUX and DEMUX configurations**
- **Telcordia GR-1209/1221 compliant**

OPTOKON

OPTOKON, a.s. is a leading global producer and supplier of premium active and passive ber optic components specializing in fully tested integrated data network, FTTx and tactical military solutions. Our components and solutions can be found in applications in businesses, communities and armed forces throughout the world.

- Fiber optic technology leadership
- 26 years experience on the global ber optic market
- NATO supplier code: 1583G
- More than 18 years experience supplying the militaries of over 25 countries
- National Security Authority certied
- ISO and AQAP certied
- Accredited Calibration Laboratory No. 2315

OPTOKON PORTFOLIO, SERVICES & DIVISIONS

FIBER OPTIC DIVISION

- Connectors, Cable Assemblies
- Cable Management Systems
- Splitters, WDM, CWDM and DWDM
- Data Network Equipment
- Test Equipment
- Harsh Environment Optical Network
- Service and Calibration Center

SERVICE CENTER

OPTOKON GROUP HEADQUARTERS PRODUCTION & RESEARCH CENTER CZECH REPUBLIC

Červený Kříž 250, Jihlava
OPTOKON Prague Office
Venušina 1149/3, Prague 10

OptoNET Communication
- Complete solution for ISP
- Management of optical network
- Datacenter and telehouse services

OPTOKON Kable
- Optical cables manufacturing

OPTOKON Baltic
OPTOKON Germany
OPTOKON Malaysia
OPTOKON Poland
OPTOKON Saudi Arabia
OPTOKON Serbia
OPTOKON Slovenia
OPTOKON Ukraine
OPTOKON USA

Your local partner

OPTOKON, a.s., Červený Kříž 250
586 01 Jihlava, Czech Republic
tel. +420 564 040 111, fax +420 564 040 134,
WWW.OPTOKON.COM, INFO@OPTOKON.COM